Newton Newtonite Lath

Meshed Damp Proofing Membrane

Rev 10 16 November 2026
Code: M9, M16, M21 & M22

PRODUCT OVERVIEW

Newtonite Lath is a composite damp proofing membrane comprising of high density polyethylene membrane with a rot-proof polythene mesh heat-welded to the surface of one side during the manufacturing process. The meshed surface creates a mechanical key to allow the membrane to be plastered, rendered or to receive dot & dab plasterboard.

Newtonite Lath is one of a range of membranes within the Newtonite System of damp proofing products. If the meshed surface is not required because the wall finish will be a block wall or timber or metal frame, use Newtonite instead.

Newtonite Lath is 0.5mm thick and has a pattern of raised 3mm studs. The studs face the wall and create air channels that allow for vapour equalisation to take place between the membrane and the wall.

Newtonite Lath is light, clean and easy to handle. It can be cut with a sharp knife, scissors or shears. The membrane is inert and is highly resistant to water, alkalies, saline solutions and organic acids, and it is not affected by minerals. It is also resistant to bacteria, fungi and other small organisms.

Newtonite Lath is guaranteed against deterioration for 30 years, and has a life expectancy of at least 50 years.

Newton Waterproofing Systems was formed in 1848 and, as the first British company to produce a meshed membrane, we are now recognised as the leading supplier of damp proofing membranes in the UK. Newtonite Lath can be purchased directly from Newton or from leading builders merchants.

BENEFITS

- Provides a surface that is totally separated and unaffected by the dampness within the wall, ensuring that the wall finish will never be affected by moisture or salts
- Superb 'key' for renders or plasters
- Completely moisture-resistant but allows vapour diffusion
- Quick and easy to install
- In many cases the existing render can be left on the wall
- No requirement for damaging preparation to the wall surface

TYPICAL APPLICATIONS

- As a damp proof base for renders, plasters or dot & dab plasterboard
- As a damp proofing system to deal with rising damp

PACKAGING

1.0m x 10m - Product code M16

1.2m x 10m - Product code M9

1.0m x 20m - Product code M21

2.0m x 20m - Product code M22



COVERAGE

M16: *9 to 10m² depending on number of laps*

M9: *11 to 12m² depending on number of laps*

M21: *18 to 20m² depending on number of laps*

M22: *37 to 40m² depending on number of laps*

Head Office: Tonbridge, TN9 1RH T: 01732 360 095
North Office: Leeds, LS10 1RJ T: 0113 521 6777
www.newtonwaterproofing.co.uk
tech@newtonwaterproofing.co.uk
Opening Hours:
Monday to Friday 7:00am - 5:00pm

Newtonite Lath

Meshed Damp Proofing Membrane

TECHNICAL DATA

Features	Result	Units
Material	HDPE	
Colour	White/Translucent	
Density	505	g/m^2
Width	1.0 / 1.2 / 1.0 / 2.0	m
Length	10.0 / 10.0 / 20.0 / 20.0	m
Area	10 / 12 / 20 / 40	m^2
Stud depth	3	mm
Membrane thickness	0.5	
Height	3	mm
Vicat softening temperature	126	ºC
Packaged weight	6.2 / 7.5 / 11.34 / 24.6	kg
Service temperature	-50 to +80	ºC

Installed Performance	Result	Units	Test Method
Thickness at 100 kPa	2.64	mm	EN ISO 25619-1
Thermal conductivity	0.461	W/mK	EN 12667
Water vapour diffusion resistance – Sd value	>604	m	BS EN 1931
Water vapour diffusion resistance – μ value	>1208000	μ	Calculated from SD value
Water vapour diffusion resistance	>3020	MNs/g	Calculated from SD value
Resistance to fire	Euroclass E		BS EN 13501-1
Chemical resistance – Excellent	100	%	EN14030
Oxidation resistance – Excellent	100	%	EN ISO 13438

Head Office: Tonbridge, TN9 1RH T: 01732 360 095
North Office: Leeds, LS10 1RJ T: 0113 521 6777
www.newtonwaterproofing.co.uk
tech@newtonwaterproofing.co.uk
Opening Hours:
Monday to Friday 7:00am - 5:00pm

Newtonite Lath

Meshed Damp Proofing Membrane



SURFACE PREPARATION

- Clean the substrate to remove all loose debris and organic matter. Plaster should be removed as it can soften over time, which will weaken the fix of the membrane to the wall. If the wall render is in good condition, it does not have to be removed and the Newtonite Lath can be fitted directly over. If the render is damaged, local repairs may be required
- Loose or crumbling render should be removed and local repairs made. If the render is in very poor condition, all of it may need to be removed
- Obtain as flat a surface as possible. If the wall is undulating, better results are produced if the wall surface is dubbed-out flat with sand & cement prior to installation of the membrane, rather than dubbing out over the top of the Newtonite Lath. A flat, uniform surface to the substrate means that the plaster or render above the Newtonite Lath will also be uniform and less likely to have cracking caused by differential thicknesses
- If evidence of bacterial growth can be seen, use a fungicidal product prior to the fitting of the membrane
- If any evidence of wet rot or dry rot is seen, have it dealt with by a qualified remedial specialist
- If a new slab is to be laid as part of the works, it is preferable to fit Newtonite Lath prior to the laying of the floor slab with the floor DPM extending upwards in front of the Newtonite Lath ready for the concrete pour

CUTTING TO SIZE

- Newtonite Lath can be cut with a sharp utility knife, scissors or shears
- Decide whether the membrane is to be fitted horizontally or vertically

MEMBRANE JOINTING

- Joints may be made horizontally or vertically
- Joints are created by butt jointing the two edges together and then oversealing the joints with Newton Mesh Tape
- Newtonite Lath can be taken around corners. On particularly difficult corners, cut the Newtonite Lath and butt joint and seal as above
- Newton Mesh Tape should be firmly pressed into the mesh of the Newtonite Lath to facilitate the joint. In cold and damp conditions a heat gun should be used to gently evaporate surface moisture and then to assist in pressing the Mesh Tape into the mesh of the membrane

SEALING AROUND PROTRUSIONS

Where the membrane has to be cut around pipes or other protrusions, carefully cut the membrane around the protrusion and then seal around the protrusion with Newton Mastic to ensure there is no bridging between the damp substrate and the new finish. With fix brackets, etc., Newton Mastic should be inserted before fixing bolts are inserted to ensure no bridging from the damp substrate occurs.

PUNCTURING THE MEMBRANE

If the finished wall is punctured when holes are drilled to fix brackets, etc., Newton Mastic should be inserted before fixing bolts are inserted to ensure no bridging from the damp substrate occurs.

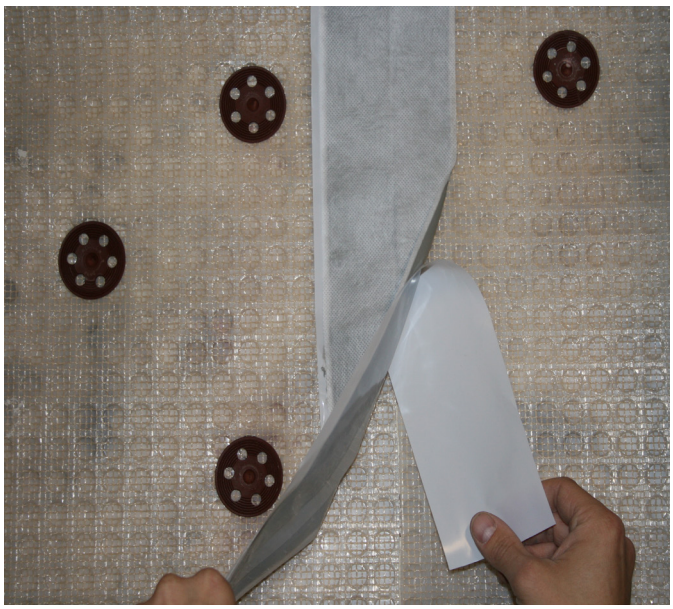

Head Office: Tonbridge, TN9 1RH T: 01732 360 095
North Office: Leeds, LS10 1RJ T: 0113 521 6777
www.newtonwaterproofing.co.uk
tech@newtonwaterproofing.co.uk
Opening Hours:
Monday to Friday 7:00am - 5:00pm

FIXING TO THE WALL

Cut the membrane to size. Ideally, Newtonite Lath should be continued up into ceiling voids and down past the slab to the oversite. If this is not possible, cut the membrane so that it finishes tightly to the soffit and floor finish. A gap is not required at the soffit or floor, indeed the system works more efficiently when the system is not ventilated as this impedes the natural vapour drive from inside the property to the outside that still continues through the Newtonite Lath

Newtonite Lath is fitted to the wall with the studs facing the wall and the flat meshed surface facing inwards towards the applicator. Fix the membrane to the wall with the Newtonite Mesh Plug to all substrates except when fixing to plywood or timber, when a galvanised clout nail should be used, or to slightly friable mortar substrate, when the Newtonite Cob Plug should be used

Newtonite Lath can be fitted horizontally or vertically. Fit the membrane as level as possible - best results are achieved when a long builders level or a rotating laser level is used. Care must be taken to ensure that the Newtonite Lath is pulled tight and square while fixing as this will avoid sagging or bulging which can cause problems when plastering or rendering

Using a 7 or 8mm drill bit (depending on substrate), drill through the membrane into the wall to a depth of at least 50mm

- Apply a bead of Newton Mastic around the hole to the membrane so that when the plug is hammered home, the Mastic will seal between the plug and the membrane and so prevent migration of dampness and salting from the substrate to the wall finish
- Use a small number of fixings to initially fit the membrane to the wall as level as possible
- Once the section of membrane is on the wall, add further fixings
- Hammer the plugs home using a wide headed hammer such as a lump hammer or mallet
- A smaller-diameter bit can be used on softer substrate to ensure a tight fit for the plug
- Fixing centres must not be greater than 250mm
- On curved or uneven surfaces, closer fixings should be used
- Fit Newtonite Lath 300mm to return walls to isolate wall finishes from dampness transmitting from the main wall being treated
- Newtonite Lath can be taken into reveals
- Fixing should not take place above 30°C or below -5°C

FINISHING PROFILE

- It is recommended that renders and plasters are raised from the floor by 20-25mm to prevent bridging from the floor. Newtonite Finishing Profile, available in 2 metre lengths, should be fitted to the bottom of the Newtonite as a plaster stop, guaranteeing that the plaster/render will stop short of the floor
- Newtonite Finishing Profile must be fixed at the same time as Newtonite Lath and therefore before the plaster or render is applied
- Newtonite Finishing Profile is not recommended where the run of wall is uneven or when the membrane is extended down past the slab. Once the finish has been applied and has dried, the 20-25mm gap to the bottom of the plaster/render should be covered by a timber skirting.

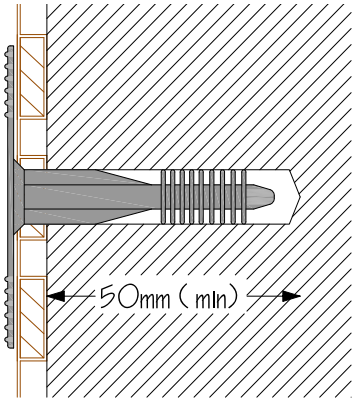

STORAGE

Newtonite Lath should be stored with the rolls standing up on end and away from direct sunlight.

SPECIFICATION

Newton Waterproofing Systems work in partnership with RIBA NBS who publish our products on NBS Source. The platform integrates seamlessly into project workflows, providing all product data from Newton's NBS BIM Objects, NBS Plus Clauses and RIBA Product Selector into one single source of product information.

NBS Source also hosts a large selection of Newton case studies, as well as product literature and certifications. A wide range of drawings are available on our website.

Head Office: Tonbridge, TN9 1RH T: 01732 360 095
North Office: Leeds, LS10 1RJ T: 0113 521 6777
www.newtonwaterproofing.co.uk
tech@newtonwaterproofing.co.uk
Opening Hours:
Monday to Friday 7:00am - 5:00pm

FINISH (GENERAL)

- Newtonite Lath is suitable for wall finishes including plaster, render, hydraulic lime or plasterboard bonded to the membrane with a propriety adhesive compound
- Whilst any cement rendering is prone to cracking, careful application can reduce or avoid this
- Problems occur when the scratch coat has not been allowed to fully cure prior to the float coat being applied, but the most common problem we see is where the render has not been allowed to fully cure due to accelerated drying. It is extremely important that the render is slowly cured for a period of 7-10 days, longer if possible. The render gets its strength from the chemical processes that take place between the cement content and the added water. The cement needs the correct amount of water to be available to it during the whole of the curing period. If the render dries too quickly due to exposure to sunlight, wind or even dehumidification, the cement will not be able to react with water, producing a weak render that will be prone to cracking
- The render should be dampened regularly during the curing process
- Hairline cracking can be made good with fine fillers, or alternatively a high-build masonry paint can be applied

DO NOT APPLY DECORATIONS UNTIL PLASTERS OR RENDERS ARE THOROUGHLY DRY.

PLASTERING (INTERNAL)

- The recommended plaster for Newtonite Lath is Tarmac Whitewall One Coat. **Please note that we do not recommend that this product is used in one single coat to Newton Mesh membranes**
- The application of the plaster should be in two coats: 6mm scratch coat, 6mm second or float coat
- If a finish coat is required this should be of 3mm
- Tarmac Whitewall should be applied in accordance with good plastering practice as described in BS 8481:2006, BS EN 13914-2:2005
- Always allow 24 hours drying time between coats of plaster. For a high-impact resistant finish, use Tarmac Backing Plaster and Tarmac High Impact Finishing Plaster
- **NOTE: Tarmac Backing Plaster and Tarmac High Impact Finishing Plaster are not suitable for areas of high humidity and wet areas such as swimming pool surrounds**

RENDERING (INTERNAL)

- Render with a mix of sand, cement and lime should be applied in two coats using the procedures defined within BS EN 13914-1:2005 to a total thickness of 14mm
- A 3mm skim coat of finishing plaster can be added once the render is fully cured
- The scratch coat should be a mix of 1 part lime: 1 part cement: 5 parts clean, well-graded sharp sand, and the second or float coat should be a mix of 1 part lime: 1 part cement: 6 parts clean, well-graded sharp sand. The scratch coat should be 7mm and the second or float coat should be 7mm
- To lessen incidents of cracking, it is best to mix the lime and sand a day or more before use. Cement can then be added at the time of rendering
- The work should be of two coats of render and if required, a third coat of finishing plaster. The purpose of the 7mm scratch coat is to stiffen up the lath and to provide rough and absorbent backing for subsequent coats
- Work this scratch coat well into the mesh
- Each 7mm coat of render should be allowed to dry for a period of not less than seven, preferably ten days, longer if possible. Cracking may occur if shorter time is allowed between coats
- It is important that the render coats are allowed to cure correctly over the 7 to 10 day period with the render dampened as required. If the scratch coat has not fully cured, slumping of the render can occur
- Before applying the second or float coat, carefully drill or scratch out a small section into an area behind the mesh, within the membrane stud, to confirm that it is fully cured. The surface will cure quite quickly but the area behind the mesh must be fully cured as well
- In warm periods the render should be protected from excessive drying out by covering with damp hessian sheets with plastic sheeting over
- Dampen down the scratch coat before application of the float coat
- A smooth finish is not recommended
- Expansion joints should be trowelled in through the render to the membrane. These joints must be filled with a suitable flexible polymer-based sealant
- Expanded metal angle beads and stop beads can be fixed where appropriate using dabs of the same material mixed as for the scratch coat

Head Office: Tonbridge, TN9 1RH T: 01732 360 095
North Office: Leeds, LS10 1RJ T: 0113 521 6777
www.newtonwaterproofing.co.uk
tech@newtonwaterproofing.co.uk
Opening Hours:
Monday to Friday 7:00am - 5:00pm

HYDRAULIC LIME (INTERNAL)

First Coat

Using a ratio of 1 part Lime to 2 1/2 - 3 parts sharp washed sand with evenly distributed hair throughout the mortar and working to a layer of 10mm thick, push the plaster into and across the pre-wet laths at a 45 degree angle to the lathes. The plaster should be correctly cured until hard

Second Coat

The second coat also known as the intermediate or float coat will be applied similar to the first coat only without any hair being added to the mortar. You must ensure you wet down the first coat with a fine mist before spreading a 7mm coat, before scratching up and leaving in preparation of the finish coat.

Finish Coat

Coat For the final top coat a fine mix of 1 part lime putty to 2 parts well graded super fine sand. Remembering to wet down the surface before application with a fine mist spray. Allow time for the water to absorb into the plaster then apply a coat of approximately 5mm, then rule off and leave for a couple of hours. When ready, rub up the finish coat using a plastic or wooden trowel to bring back the fat until the required finish has been reached in the case of any light crazing this can be rubbed up and trowelled out.

PLASTERBOARD ON DABS

Plasterboard panels can be fixed to Newtonite Lath by the dot and dab method, giving a dry surface ready for immediate decoration.

'Dabs' should be applied to the heads of the Newtonite Mesh Plugs, board edges and membrane to cover 50% of the Newtonite Lath.



Laminated boards must be fixed to the wall with a mechanical fixing at each side of the board, to the upper half of the board, so that the laminated board does not come apart and block exits during a fire. This is a requirement of UK building code. Ensure that the mechanical fixings are either above the membrane height or where fixed through the membrane, above the expected height of moisture within the wall.

DO NOT APPLY DECORATIONS UNTIL PLASTERS OR RENDERS ARE THOROUGHLY DRY.

COVERAGE

Tarmac Whitewall: *1.6m^2 per 25kg bag.*

3.5 NHL mixed with sand at 1:2.5 : 3.5m^2 per 25kg bag.

LIMITATIONS

Newtonite Lath is a damp-proofing product for use to above ground (non earth-retaining) structures only. If the wall(s) to be treated have earth to the other side this product is not suitable and our CDM System waterproofing products should be used instead

HEALTH & SAFETY

Newtonite Lath should only be used as directed. Although the product poses no health hazards, usual protective clothing and goggles should be worn in accordance with current health and safety regulations.

We always recommend that the Safety Data Sheet (SDS) is carefully read prior to application of the material. Our recommendations for protective equipment should be strictly adhered to for your personal protection. The SDS is available upon request from Newton Waterproofing or online via our website. Please see contact details below.

Newtonite Lath, Newtonite Finishing Profile, Newton Mastic, Newton Mesh Tape, Newtonite Mesh Plugs and Newtonite Cob Plugs are available from Newton Waterproofing Systems, and from good builders merchants.

Technical staff will be pleased to give help and advice on the most effective use of the product.

Newton Waterproofing Systems reserve the right to update product literature at any time. Please always refer to our website for the latest versions.

Head Office: Tonbridge, TN9 1RH T: 01732 360 095
North Office: Leeds, LS10 1RJ T: 0113 521 6777
www.newtonwaterproofing.co.uk
tech@newtonwaterproofing.co.uk
Opening Hours:
Monday to Friday 7:00am - 5:00pm